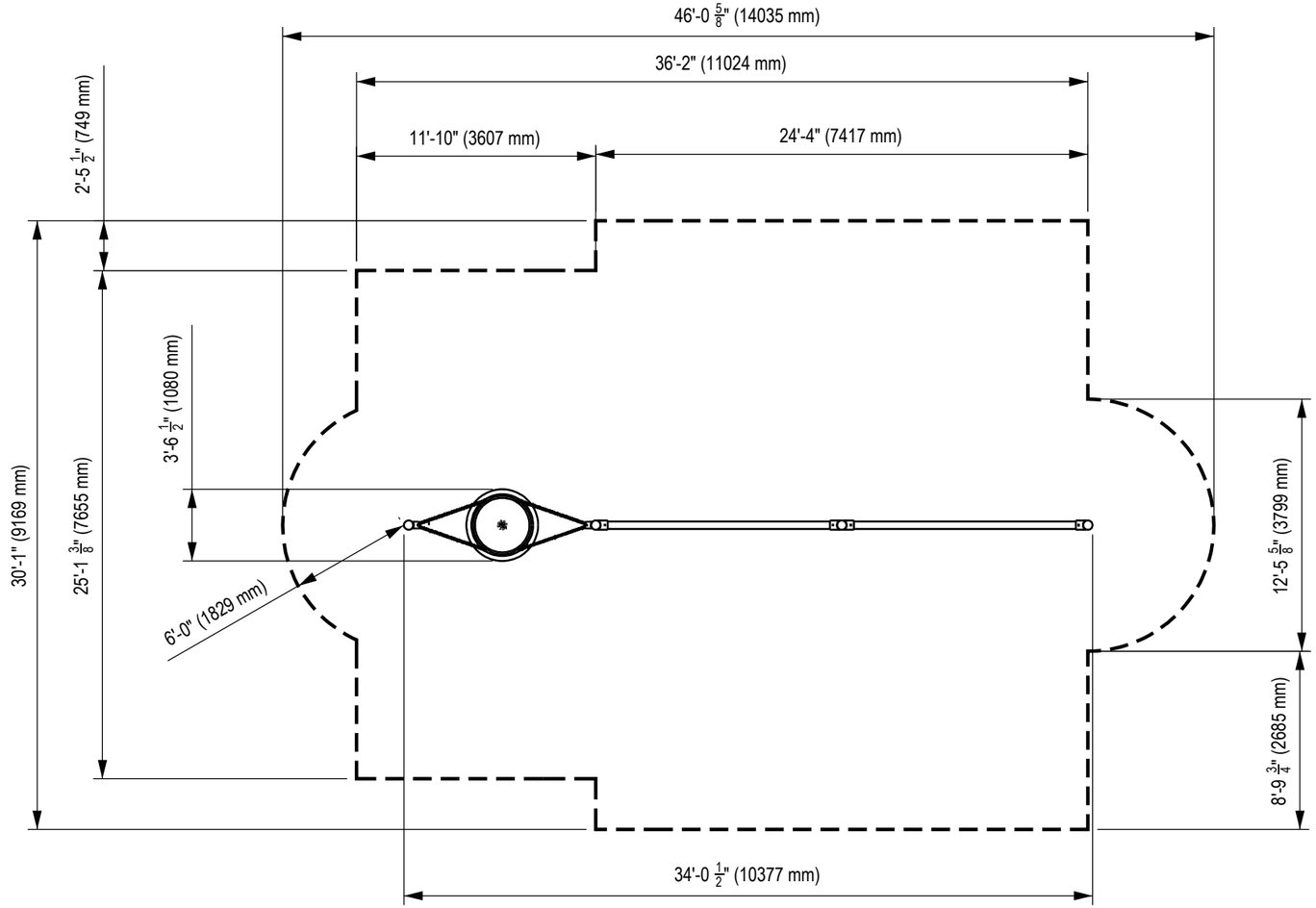

1 - ASTM USE ZONE - PLAN VIEW

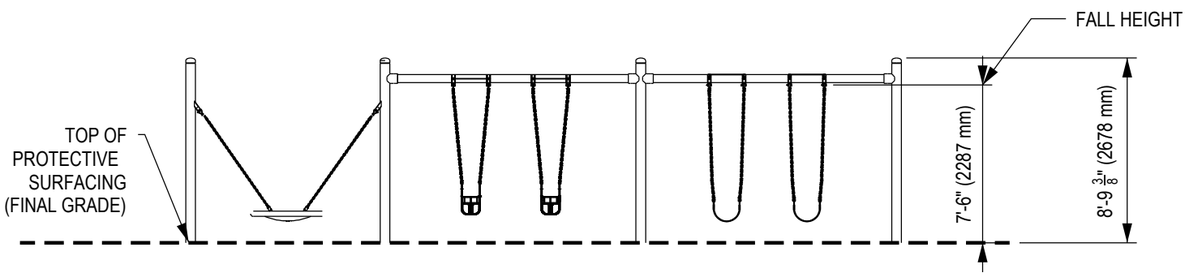

2 - ELEVATION VIEW

DOCUMENT No:	200-000-234

REVISION HISTORY

REV	DESCRIPTION	REF. No.	DATE	DRWN BY:	CHK BY:
0	Initial Release		2021-11-12	SA	

ENGINEERING SEAL:

CLIENT:

PROJECT NAME:

PRODUCT NO: DX-3175-A3

DRAWING TITLE:
BIGGO SPIA SOLO ASSEMBLY 3 ASTM USE ZONE

REV:	SHEET:	SHEET SIZE:	SCALE:
0	1 OF 1	PA3	NTS

DESIGNED BY:	DATE:
DRAWN BY: S.ALAKTHERI	DATE: 2021-11-12
CHECKED BY:	DATE:
REVIEWED BY:	DATE:
APPROVED BY:	DATE:

DYNAMO PLAYGROUNDS
Local: 613-446-0030
Toll free: 800-790-0034
Email: info@dynamoplaygrounds.com
Fax: 613-446-0034
URL: www.dynamoplaygrounds.com

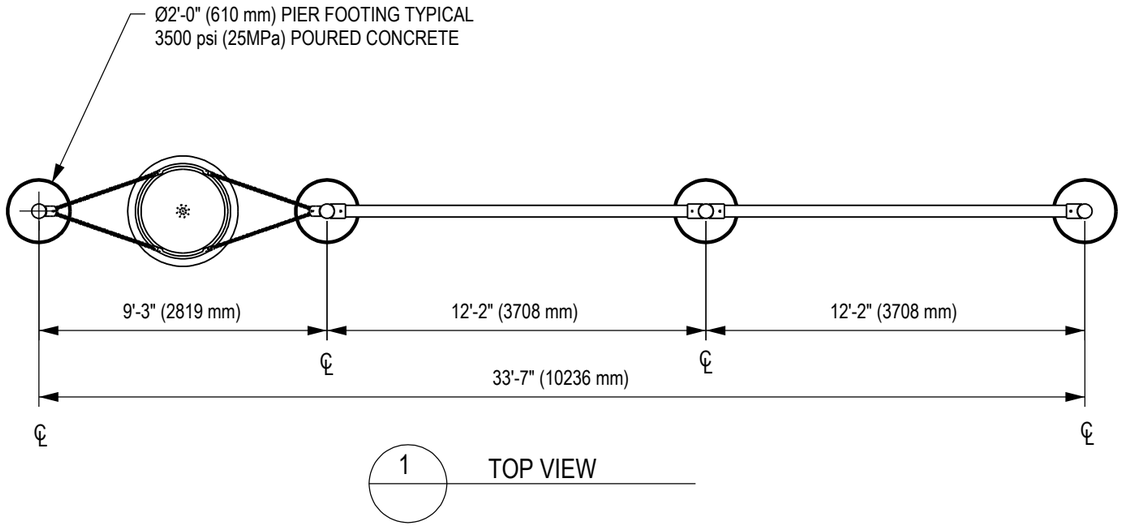

1 TOP VIEW

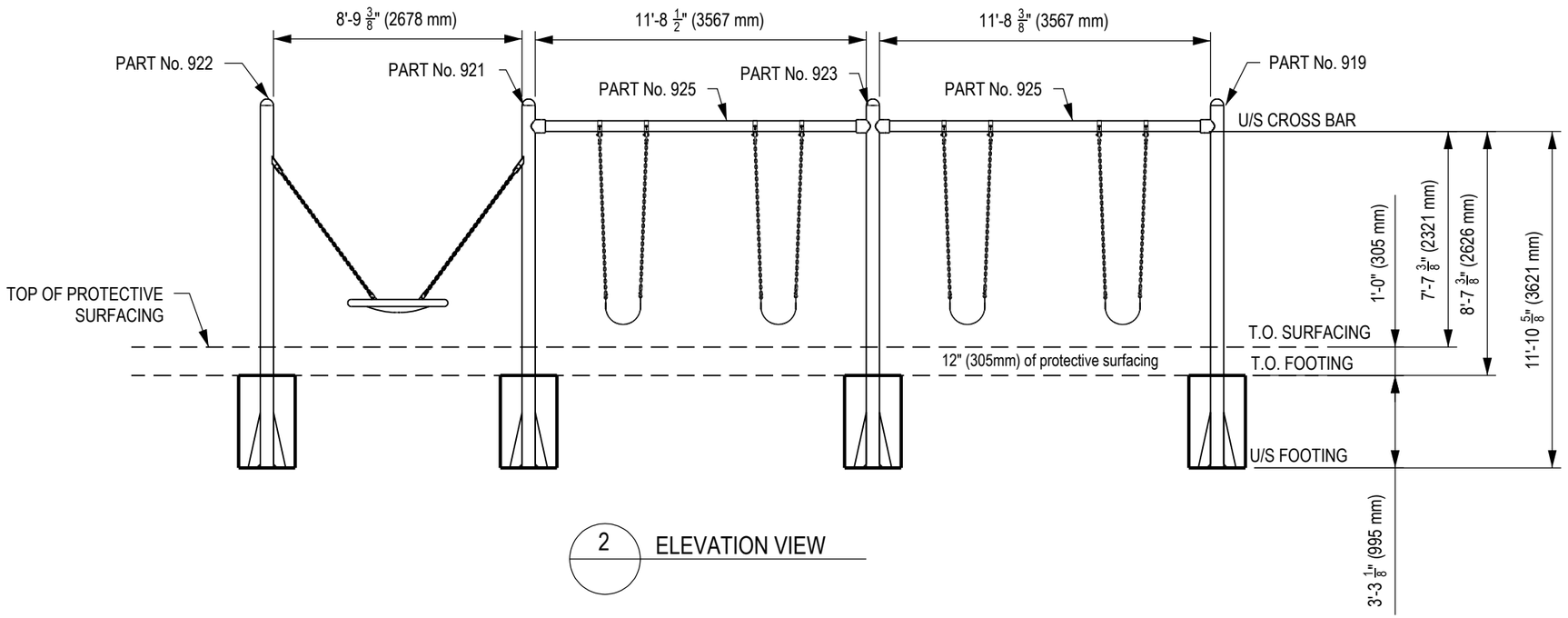

2 ELEVATION VIEW

GENERAL NOTES:

1. THE FOUNDATION IN THE DRAWING TO BE USED AS A MININUM GUIDELINE. CHECK WITH LOCAL ENGINEERS TO ENSURE MINIMUM REINFORCEMENT TO BE APPLIED.

2. THE CONCRETE SHALL BE GRADE C25 (CHARACTERISTIC STRENGTH OF 3500 PSI AT 28 DAYS) MINIMUM.

3. THE FOUNDATION SHALL BE PLACED ON FIRM, UNDISTURBED SOIL SURFACE. WHEREVER EXCAVATION OCCURS BELOW THE DESIGNED FOUNDATION LEVEL, WELL COMPACTED BACK FILL OR LEAN CONCRETE SHALL BE USED FOR LEVELING.

4. BACKFILLING FOR FOUNDATION SHALL BE PLACED EVENLY IN 6" (150mm) LAYERS. LAYERS SHALL BE WELL COMPACTED.

5. THE FOUNDATION DESIGN IS SUITABLE FOR SOIL WITH A BEARING CAPACITY OF 1600 PSF (80 KPA) AND ABOVE.

6. THE FOUNDATION DESIGN IS SUITABLE FOR SOIL WITH FROST LINE OF 4' (1200 MM) OR LESS.

DOCUMENT No: 200-000-152

REVISION HISTORY

REV	DESCRIPTION	REF. No.	DATE	DRWN BY:	CHK BY:
0	Initial Release		2018-02-09	WC	
1	UPDATED THE TITLE BLOCK		2022-04-04	SA	JC

ENGINEERING SEAL:

CLIENT: STOCK

PROJECT NAME: STOCK

PRODUCT NO: DX-3175-A3

DRAWING TITLE:
BIGGO SPIA SOLO ASSEMBLY 3 FOUNDATION DRAWING

REV:	SHEET:	SHEET SIZE:	SCALE:
1	1 OF 1	PA3	NTS

DESIGNED BY:	DATE:
DRAWN BY: WILLIAM MCNAIR	DATE: 2018-02-09
CHECKED BY: J.CHEN	DATE: 2022-04-05
REVIEWED BY:	DATE:
APPROVED BY:	DATE:

DYNAMO PLAYGROUNDS
Local: 613-446-0030
Toll free: 800-790-0034
Email: info@dynamoplaygrounds.com
Fax: 613-446-0034
URL: www.dynamoplaygrounds.com